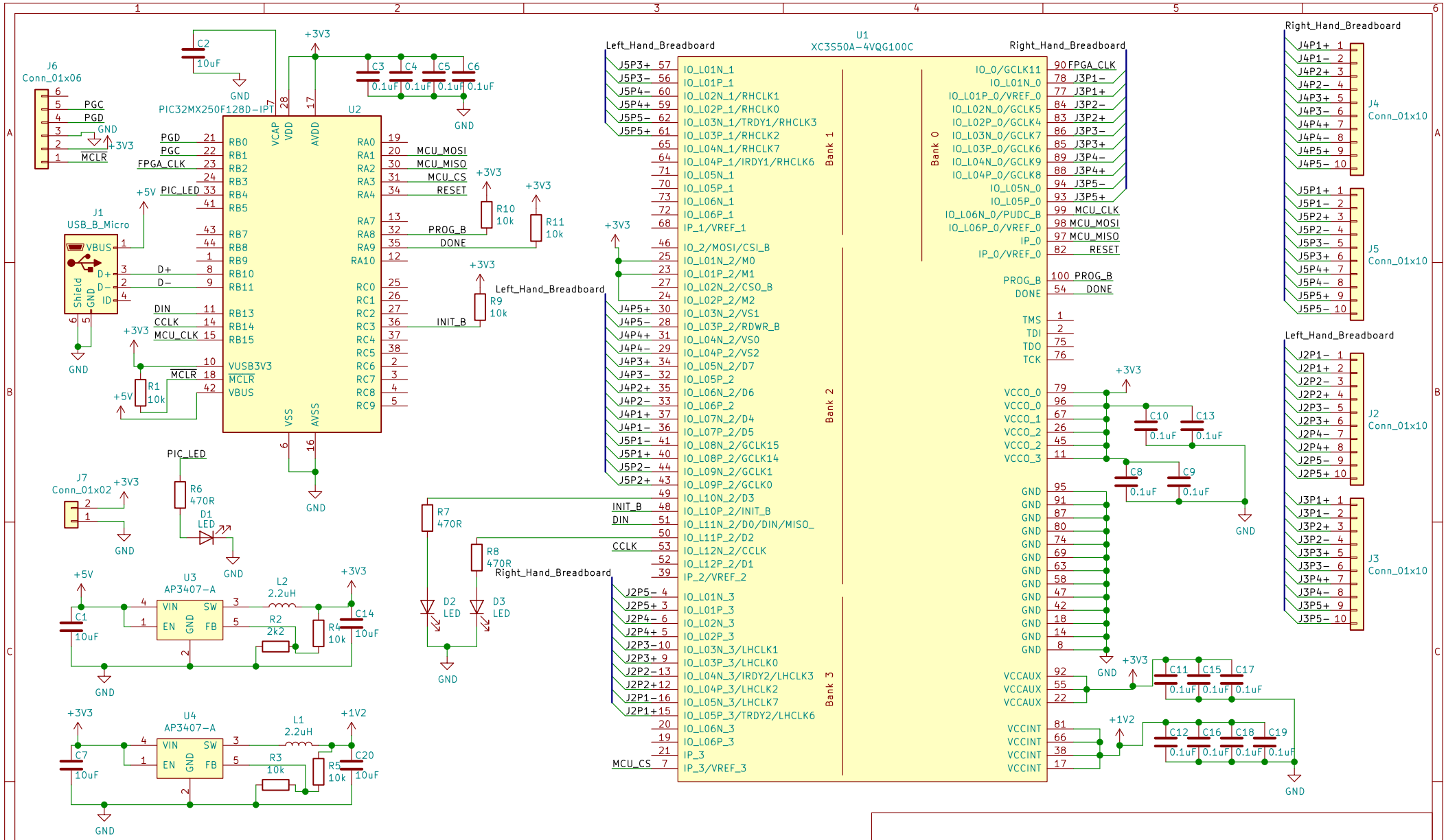

MCU: PIC32MX250F128D
FPGA: XC3S50A

Sheet: /
File: Spartan_3_Breadboard.sch

Title: Spartan 3 Breadboard PCB

Size: A4	Date: 2018-08-31	Rev: A
KiCad E.D.A. kicad (5.0.0)		Id: 1/1